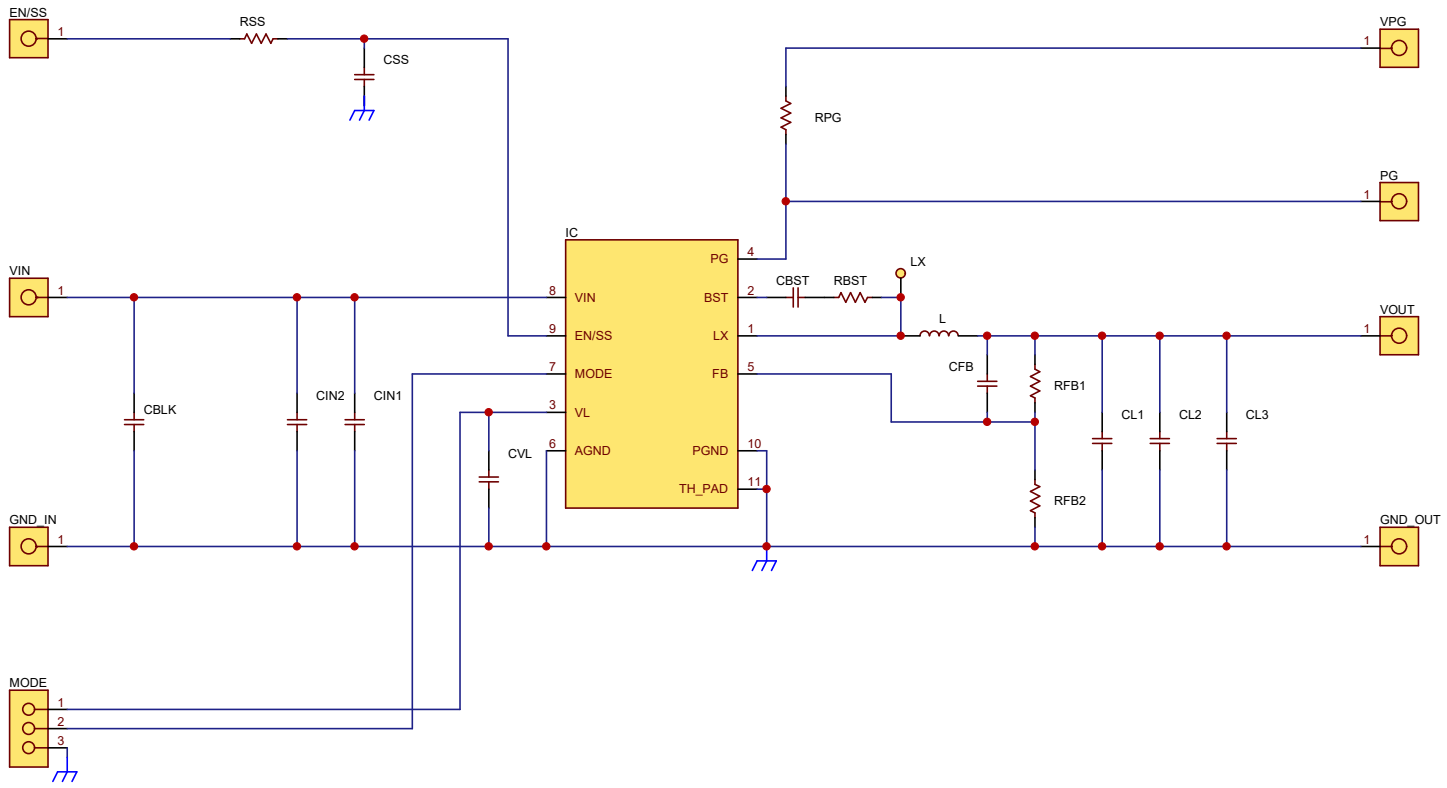

Series Name	XC9702 / XD9702
Category Name	Step-Down DC/DC Converters
Packages	USP-10B
TOREX SEMICONDUCTOR	A4
	1 / 1