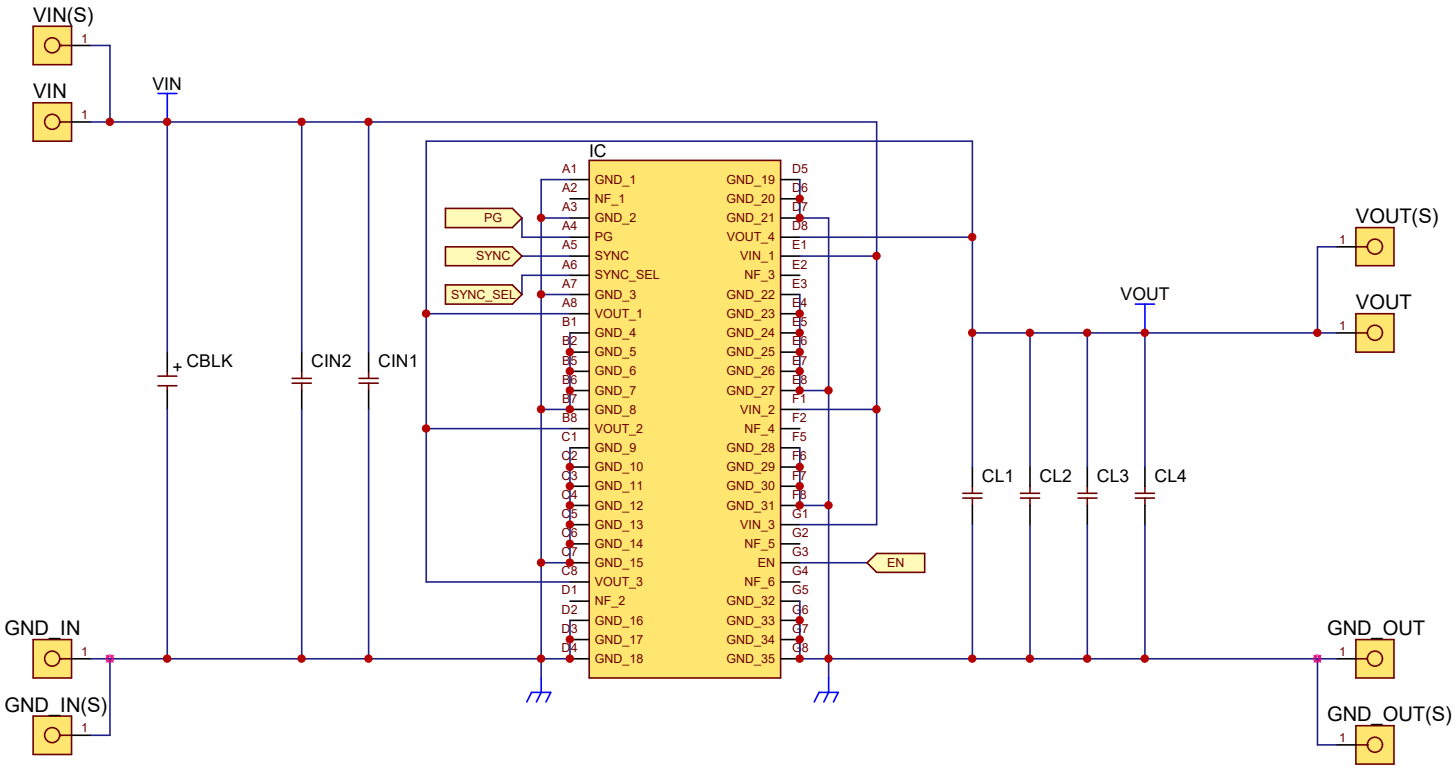


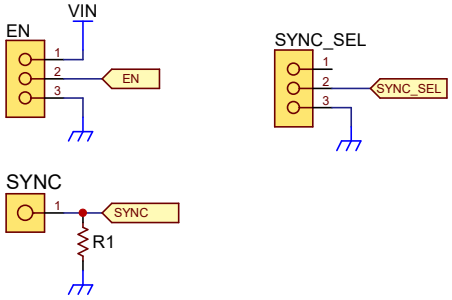


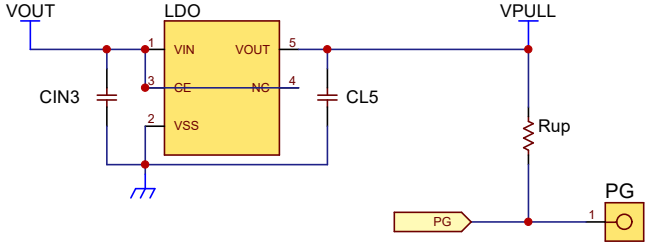


| | |
|---|---|
| **Series Name** | XM981A |
| **Category Name** | Step Down Charge Pump |
| **Packages** | - |
| **TOREX SEMICONDUCTOR** | A4 |
| | 1 / 1 |