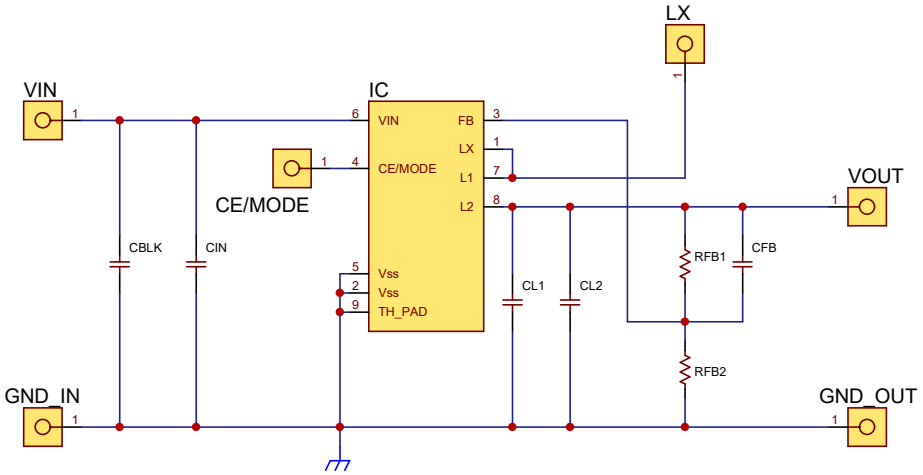

Series Name	XCL205/XCL206/XCL207 FB
Category Name	Inductor Built-in DC/DC Converters
Packages	-
TOREX SEMICONDUCTOR	A4
	1 / 1