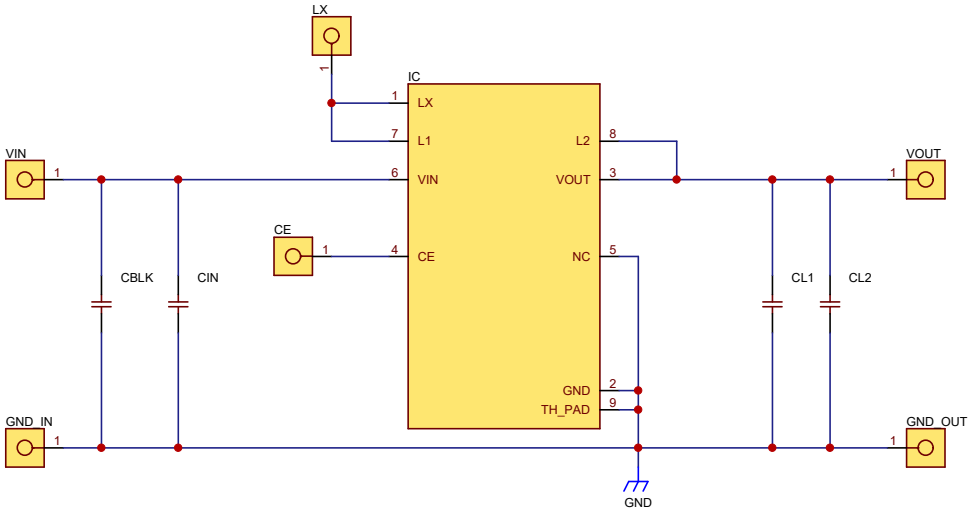


| | |
|---|---|
| **Series Name** | XCL232 |
| **Category Name** | Inductor Built-in DC/DC Converters |
| **Packages** | CL-2025-03 |
| **TOREX SEMICONDUCTOR** | A4 |
| | 1 / 1 |