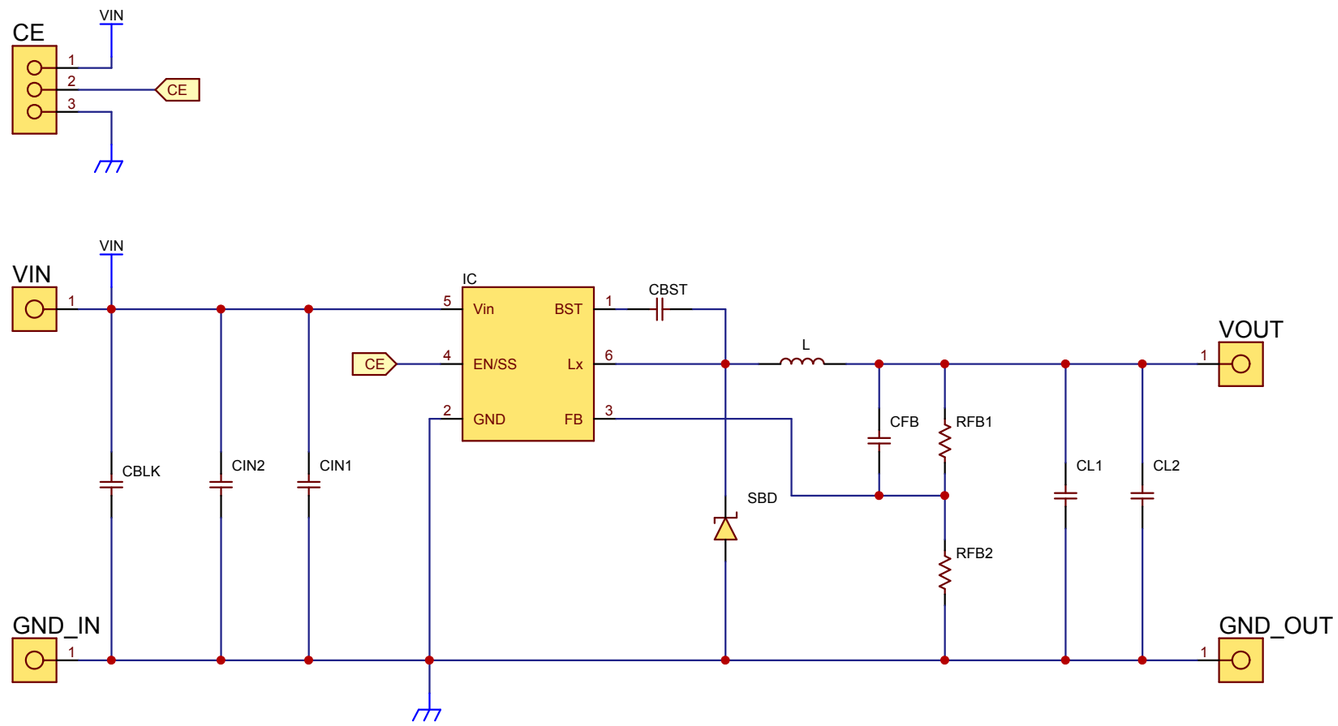

Series Name	XC9246 / XC9247
Category Name	Step-Down DC/DC Converters
Packages	SOT-26W
TOREX SEMICONDUCTOR	A4
	1 / 1