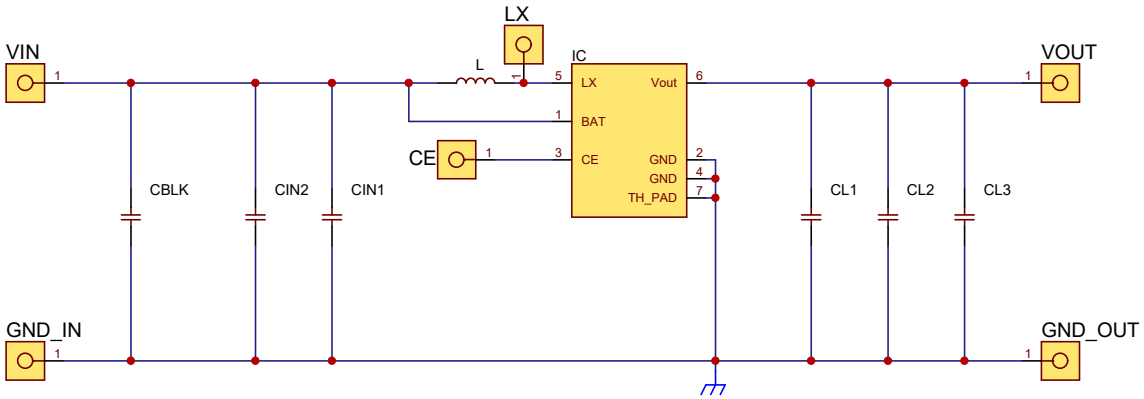

Series Name	XC9141/XC9142 XC9145, XC9147/XC9148
Category Name	Step-Up DC/DC Converters
Packages	USP-6C
TOREX SEMICONDUCTOR	A4 1 / 1